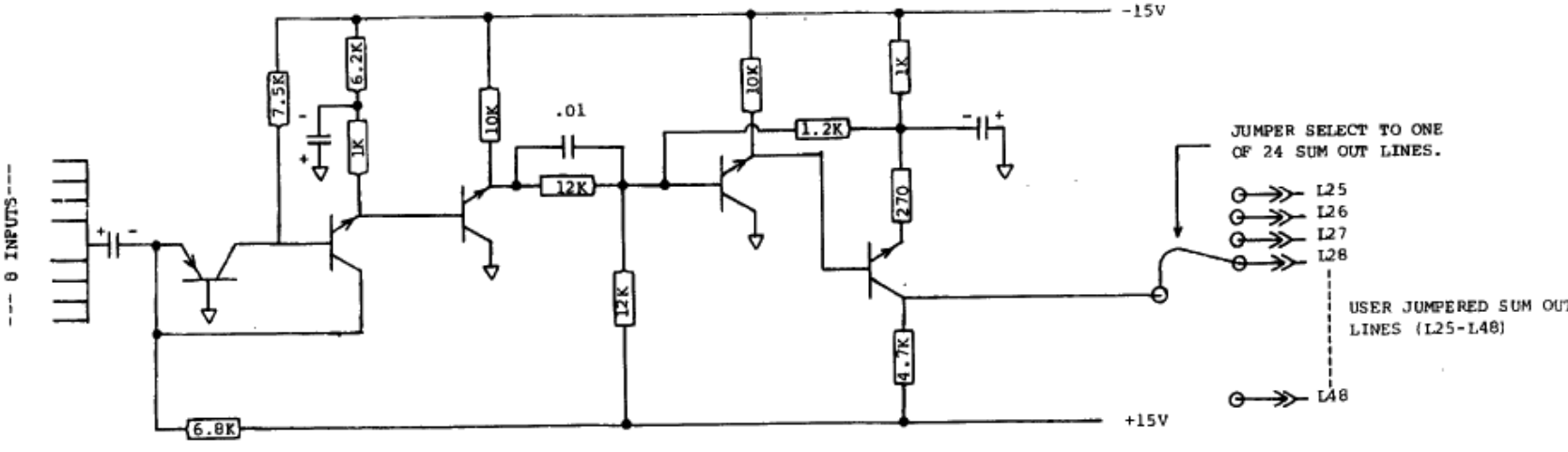

SUMBUS SHAPER/ADDER
PHYSICS DEPT. OHIO STATE UNIV.
ELECTRONICS LAB 10/29/85
DRWG.# 475 PAGE 2A